CS450: Project Checkpoint

Thomas Badros, Ri Hong, Ryan Jing, Joseph Xiao, Stone Yao

March 5, 2026

Current Progress

The team has read the *Evaluating Graph Neural Network Inference via High-Level Synthesis* (GNNHLS) paper and explored the associated code repository. The team has successfully run GNN model inference on CPU and GPU. The team has successfully generated the deployment files for the GCN model on an FPGA; however, FPGA inference has not been executed yet.

Proposal Updates

1. DRAM-based Kernel Implementation

The hardware platform used in the original GNNHLS paper differs from the FPGA resources available to our team. The paper evaluates the design on an FPGA equipped with High Bandwidth Memory (HBM), which provides significantly higher memory bandwidth than conventional DRAM. The FPGA boards available to us, including the Kria KV260, do not include HBM.

We explored provisioning an AWS F2 FPGA instance, which provides HBM, but this requires adapting the codebase to Amazon's FPGA toolflow and generating an AFI-compatible design. Given the complexity of this workflow and our limited experience with the AWS FPGA HDK, we determined that this effort would be beyond the scope of the project timeline.

Instead, we will implement and evaluate the kernels on the KV260 board using DRAM. This requires modifying the design's memory mapping to replace HBM accesses with DRAM-based interfaces. We expect overall performance to be lower than the results reported in the paper due to reduced memory bandwidth. Therefore, our evaluation will compare our optimized kernels against a baseline DRAM implementation of the GCN and GraphSage kernels rather than directly against the HBM results reported in the paper.

2. Strictly Focusing on Isotropic Models

In our initial proposal, we mentioned we would make kernel improvements to both isotropic and anisotropic models in the code repository. After review, we have changed the project focus to strictly isotropic kernels. In particular, we will focus on the GCN and GraphSage model kernels, although due to time constraints we may only work on GCN. Dataflow diagrams of the 6 kernels in the code repository are shown in Figure 1 [1].s

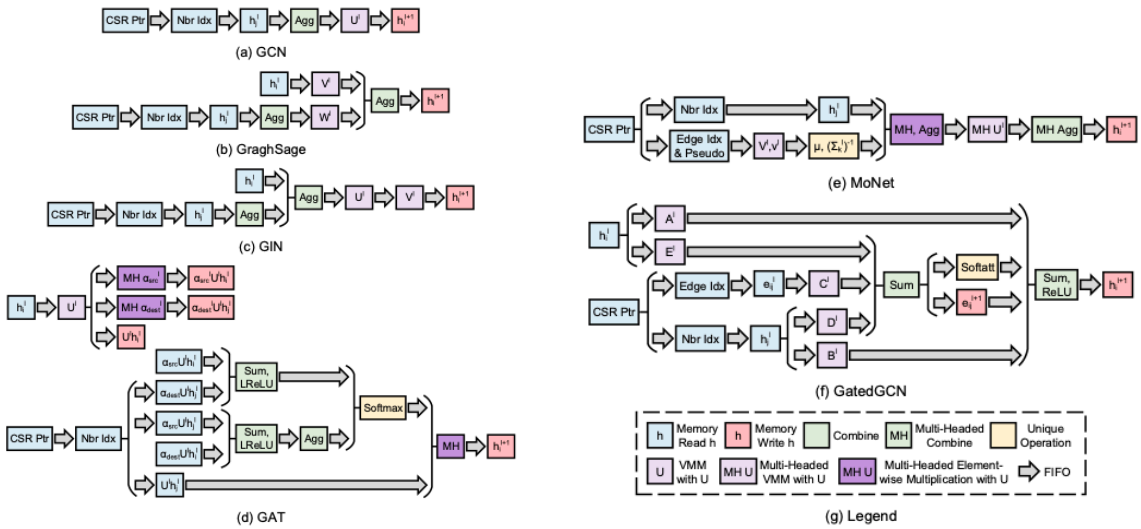

Fig. 1. Dataflow Diagrams of GNN HLS Kernels in GNNHLS [1]

The isotropic kernels have a simpler and smaller architecture. As stated in our project proposal, we will improve the bottlenecking feature aggregation stage for GCN and GraphSage. Improvements will be evaluated against the baseline DRAM-based implementation.

Improvements for anisotropic models were deemed too complicated for the project timeline. The anisotropics models are too large and require an FPGA with larger hardware/memory bandwidths than the device we have access to.

Key Results

The team successfully ran model inference model on a CPU, model inference on a NVIDIA 3090 GPU, and have started generating an FPGA implementation of the model on a Kria KV260. An example Tensorboard result can be found in Figure 2 in the appendix.

The team struggled to run the models on machines with newer Ubuntu versions and the Xilinx hardware in the UW computer labs. This was also discussed in the Project Updates section. The team realized some of the kernels were impractical for the hardware available to them and shifted their focus to kernels compatible with their setup. The team successfully generated the deployment files for the GCN model on an FPGA.

Next Steps

Our next step is to run model inference on the FPGA. We will use the Vitis software to inspect the critical path of the layout and make improvements to the GCN kernel based on that information. We will gather metrics on this initial DRAM-based implementation to evaluate further improvements.

References

[1] C. Zhao, Z. Dong, Y. Chen, X. Zhang, and R. D. Chamberlain, "GNNHLS: Evaluating Graph Neural Network Inference via High-Level Synthesis," Sep. 27, 2023, *arXiv*: arXiv:2309.16022. doi: 10.48550/arXiv.2309.16022.

Appendix

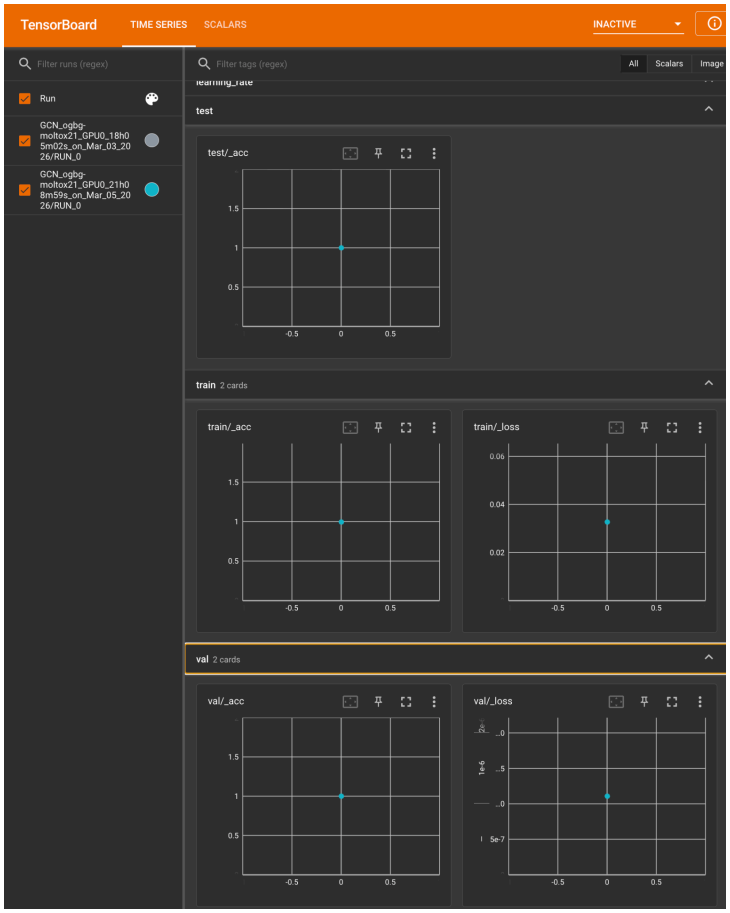

Fig. 2. TensorBoard of GPU Inference of GNNHLS Usage Example